5 Great Clamp Organizers

Solve your clamp-storage problems once and for all with one or more of our five custom holders. These clever wall-hung helpers not only keep all your clamps at arm's reach, they also look great doing it.

I Like This! (28)

Introduction

+ ENLARGE IMAGE

Solve your clamp-storage problems once and for all with one or more of our five custom holders. These clever wall-hung helpers not only keep all your clamps at arm's reach, they also look great doing it.

1. Spring-clamp holder
2. Bar-clamp rack
3. Locking C-clamp support
4. C-clamp rack
5. Handscrew-clamp organizer

As a convenience to allow you to view this free woodworking plan before downloading it, we now offer a page-by-page review. If you like the plan, you'll find a Click here for a free downloadable plan link on the last page of the plan. The downloadable plan will have larger, easier to view illustrations than the online preview.

For a great selection of clamps, visit the WOOD Store.

I Like This! (28)

Spring-clamp holder

+ ENLARGE IMAGE

1 Simple, sturdy, spring-clamp holder

A backboard with protruding dowels does the job for supporting 4", 6", and 9"-long spring clamps. If you've got a similar assortment of these clamps, the rack shown here should suffice. If you've got quite a collection, extend the board or make two or more holders as needed.

We don't recommend extending the dowels longer than dimensioned on the drawing. Extended too far, they can get bumped and broken.

For a great selection of clamps, visit the WOOD Store.

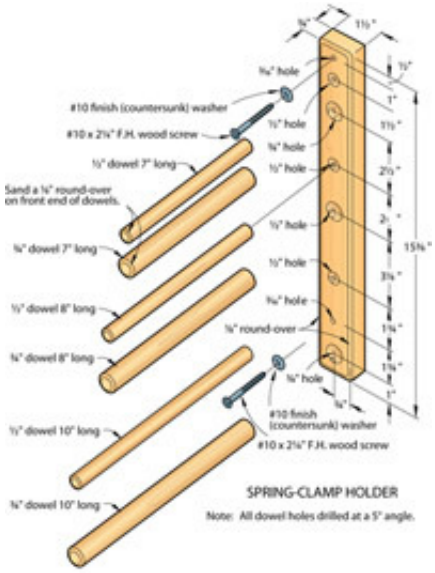

+ ENLARGE IMAGE

I Like This! (28)

Bar clamp support

2 Home for Bar clamps

The slots in this quick-and-easy holder allow you to store your sliding-head clamps in perfect order by simply resting the head on the horizontal support. Without the slots, you'd have to tighten the jaws to hold a clamp in place, and then loosen the jaws when you want to remove the clamp from the holder.

+ ENLARGE IMAGE

To make the slots, cut the horizontal support to shape, rout 3/8" round-overs along the edges and corners, and mark the notches 15/8" on center. Mount a 3/8" dado blade to your tablesaw, and raise the blade 2" above the saw table. Mount a wood extension to your miter gauge, and make the cuts where marked. As shown in the photo on page 10, we built and placed three racks end to end. You could also lengthen the two parts, and cut the number of slots needed to match your supply of clamps.

For Quick-Grip clamps, we found that an extended version (2 3/4" more from front to back) of the rack used to support our sliding-head clamps works wonderfully. The front support with its numerous slots holds the clamps upright and keeps them from dinging the wall.

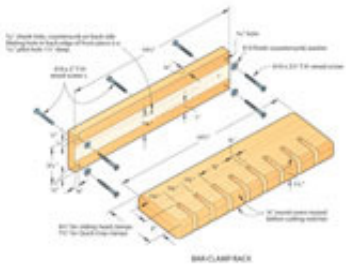

+ ENLARGE IMAGE

For a great selection of clamps, visit the WOOD Store.

I Like This! (28)

C-clamp support

3 Nifty support for locking C-clamps

Projects often require clamping pressure applied several inches in from the outside edges for a

good bond. When this happens, we turn to our locking C-clamps, the largest of which has a throat depth of over 15". To hang our collection of locking C-clamps, we found this screw-together support an organizer's dream.

For a great selection of clamps, visit the WOOD Store.

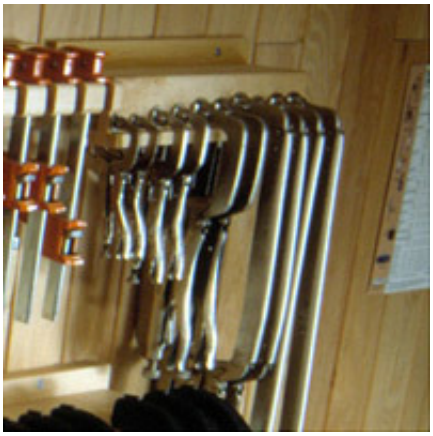

+ ENLARGE IMAGE

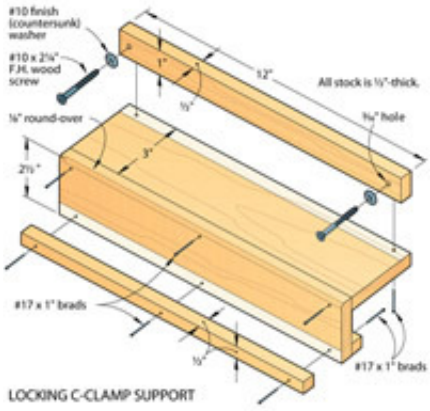

+ ENLARGE IMAGE

I Like This! (28)

Notch shelf for C-clamps

4 All-in-a-row C-clamp rack

When the job calls for plenty of clamping pressure, no-nonsense C-clamps provide the answer. To hang and organize this type of clamp, build our four-piece wall-mounted hanger with its notched front support. The notches allow you to hang the clamps on the rack without having to tighten them.

For a great selection of clamps, visit the WOOD Store.

+ ENLARGE IMAGE

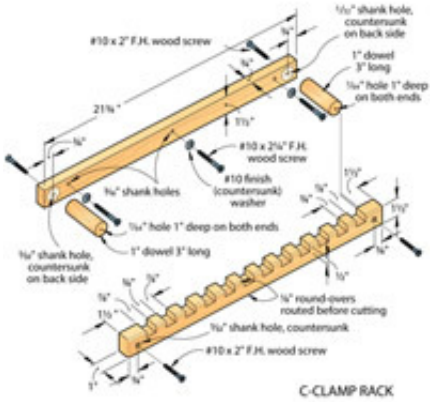

+ ENLARGE IMAGE

I Like This! (28)

Handscrew-clamp organizer

5 Handscrew-clamp hangout

If there was ever a simpler organizer for handscrew clamps, we haven't seen it. Just cut the support extension (A) to fit between the threaded rods of the clamp, chamfer the outside end of the support, and securely mount it to the backboard (B). We've found that about four clamps per support is a full load.

For a great selection of clamps, visit the WOOD Store.

Download the free Plan

+ ENLARGE IMAGE

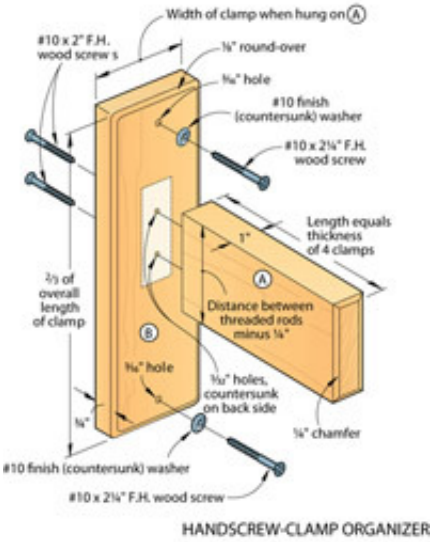

+ ENLARGE IMAGE